Data Sheet

Article number: 203280M850A1SK
Description: E+G levelling foot
GN 32-80-M8-50-A1-SK
Note: SK With nut, External hexagon at the bottom

Measures

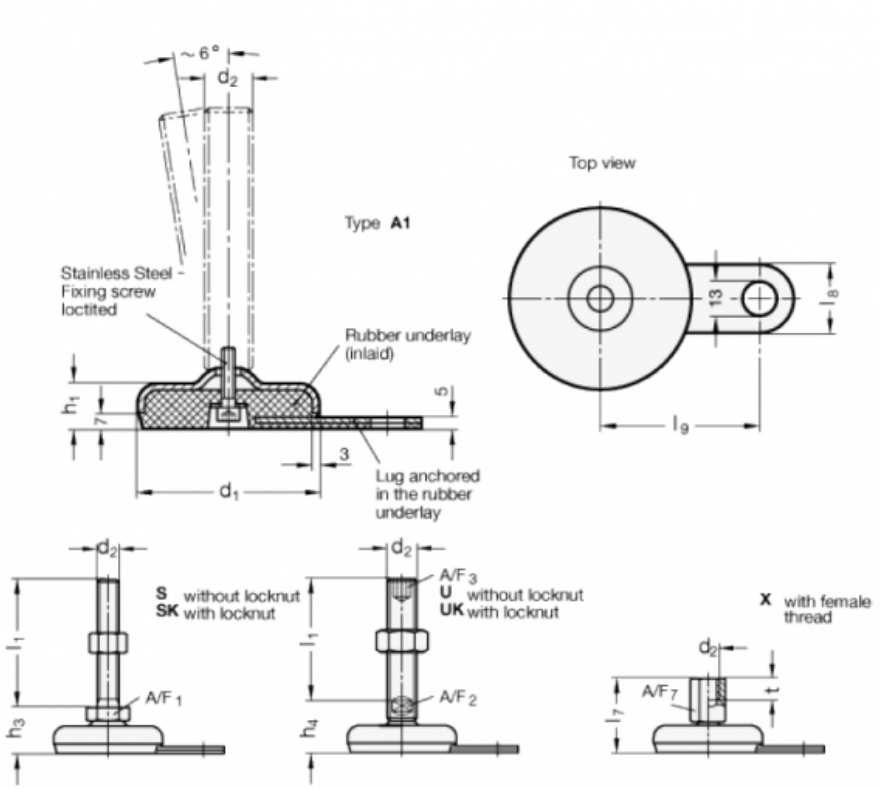

A/F1 = 17
d1 = 80
d2 = M8
h1 = 20
h3 = 28
l1 = 50
l8 = 30
l9 = 70

Product drawings and brochures of any kind may contain errors for which Brd. Klee A/S cannot be liable.